AMS

Stainless Steel Centrifugal Pump





Application

- It is applicable to household water supply, equipment support, pipeline pressurization, garden watering, vegetable greenhouse watering,fish farming and poultry raising, industrial and mining, water supply and drainage of enterprises and high-rise buildings, central air conditioner and centralized heating circulation system, etc.

Pump

- AISI 304 pump body
- AISI 304 shaft
- Max. liquid temperature: +85℃
- Altitude: up to 1000 m (A motor with more power is required in case the altitude is above 1000 m.)

Motor

- C&U bearing
- Built-in thermal protector for single phase motor
- Insulation class: F
- Protection class: IPX4
- Max. temperature: +40℃

Identification Codes

A MS m 210 / 1.5

- 1.5 — Rated Power (kW)
- 210 — Rated Flow (l/min)
- m — Single Phase Motor (Omitted for three-phase motor)
- MS — Stainless Steel Centrifugal Pump
- A — LEO Product Style

Technical Data

MODEL		POWER		m³/h	0	7.2	8.4	9.6	10.8	12	15	18	21	24
Single Phase	Three Phase	kW	HP	l/min	0	120	140	160	180	200	250	300	350	400
AMS(m)210/1.5	AMS210/1.5	1.5	2.0	H (m)	27.5	24.9	23.9	23.1	22.1	21.0	18.1	14.5	-	-
AMS(m)210/2.2	AMS210/2.2	2.2	3.0		30.1	29	28.7	28	26.7	25.8	22.9	14.7	-	-
AMS(m)370/2.2	AMS370/2.2	2.2	3.0		27.7	-	-	-	23.5	22.8	20.4	17.2	13.7	9.6

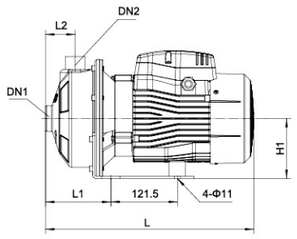

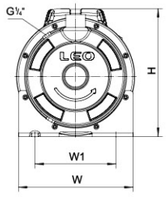

Dimension

Model	Ports		L (mm)	W (mm)	H (mm)	L1 (mm)	L2 (mm)	W1 (mm)	H1 (mm)
	DN1	DN2							
AMS(m)210/1.5	1 1/2"	1 1/4"	440	210	250	119	55	149	110
AMS(m)210/1.2	1 1/2"	1 1/4"	440	210	250	119	55	149	110
AMS(m)370/2.2	2"	1 1/4"	440	210	250	119	55	149	110

Hydraulic Performance Curves

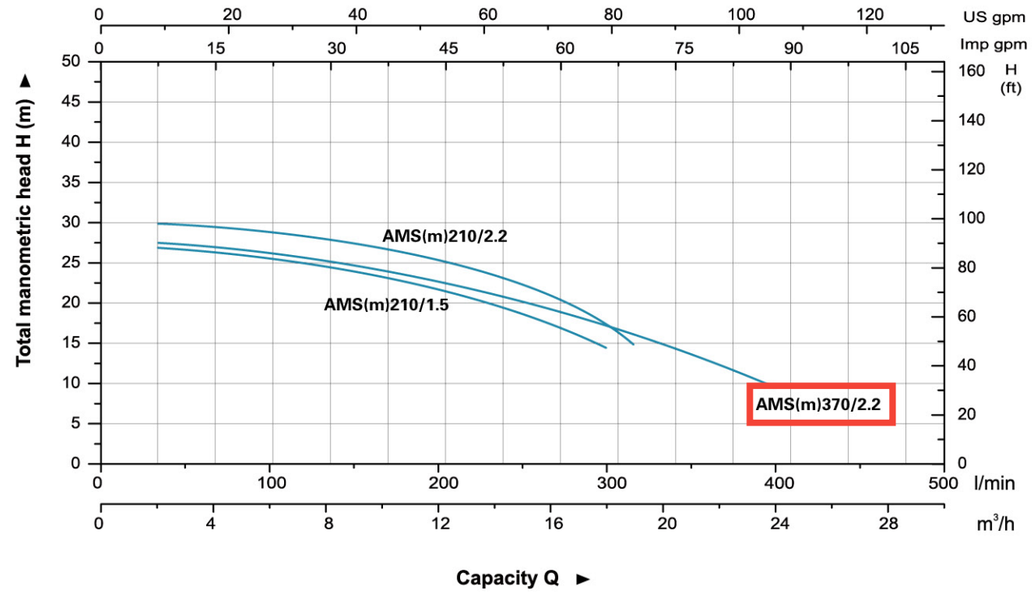

Materials Table

No.	Part	Material
1	Bottom support	Steel
2	Pump body	AISI 304
3	Diffuser	AISI 304
4	Impeller	AISI 304
5	O-ring	NBR
6	Airproof plate	AISI 304
7	Support	ZL102
8	Mechanical seal	Silicon/Carbon
9	Ball bearing	
10	Rotor	
11	Stator	
12	Fan	PP
13	Rear housing	ZL102
14	Fan cover	PP
15	Terminal box	ABS

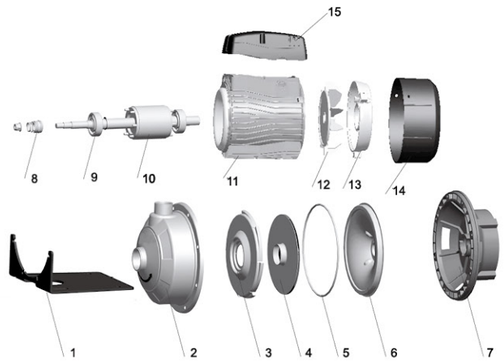

Package Information

Model	GW (Kgs)	L (mm)	W (mm)	H (mm)	Quantity (PCS/20'TEU)
AMS(m)210/1.5	18	465	240	270	864
AMS(m)210/2.2	20	465	240	270	864
AMS(m)370/2.2	20.8	465	240	270	864

