



Application

- It is applicable to household water supply, equipment support, pipeline pressurization, garden watering, vegetable greenhouse watering, fish farming and poultry raising, industrial and mining, water supply and drainage of enterprises and high-rise buildings, central air conditioner and centralized heating circulation system, etc.

Pump

- AISI 304 pump body
- AISI 304 shaft
- Max.liquid temperature: +85°C
- Altitude: up to 1000 m (A motor with more power is required in case the altitude is above 1000 m.)

Motor

- Low noise&Long life bearing
- Built-in thermal protector for single phase motor
- Insulation class: F
- Protection class: IPX4
- Max. ambient temperture: +40°C

Identification Codes

A MS m 70 / 0.75

- 0.75 — Rated Power (kW)
- 70 — Rated Flow (l/min)
- m — Single Phase Motor (Omitted for three-phase motor)
- MS — Stainless Steel Centrifugal Pump
- A — LEO Product Style

Technical Data

Model		Power		Q(m^3/h)	0	1.8	2.4	3.6	4.8	6	7.2	8.4	9.6	10.8
Single Phase	Three Phase	kW	HP	Q(l/min)	0	30	40	60	80	100	120	140	160	180
AMSm70/0.75	AMS70/0.75	0.75	1.0	H (m)	32.3	29.7	28.7	26.2	22.8	16.7	-	-	-	-
AMSm120/1.1	AMS120/1.1	1.1	1.5		32.9	-	-	28.6	27.0	25.2	23.0	21.0	17.8	14.6
AMSm120/2.2	AMS120/2.2	2.2	3.0		44.9	-	-	41.1	39.2	36.8	33.5	31.6	28.2	20.2

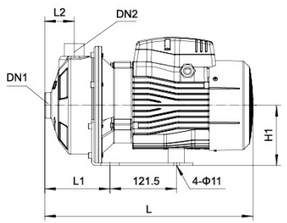

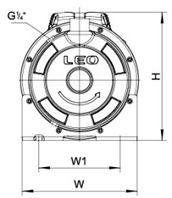

Dimension

Model	DN1	DN2	L (mm)	W (mm)	H (mm)	L1 (mm)	L2 (mm)	W1 (mm)	H1 (mm)
AMS(m)70/0.75	$1^1/_4$"	1"	381	210	234	109	55	149	110
AMS(m)120/1.1			381	210	234	119	55	149	110
AMS(m)120/2.2			429	210	250	119	55	149	110

Hydraulic Performance Curves

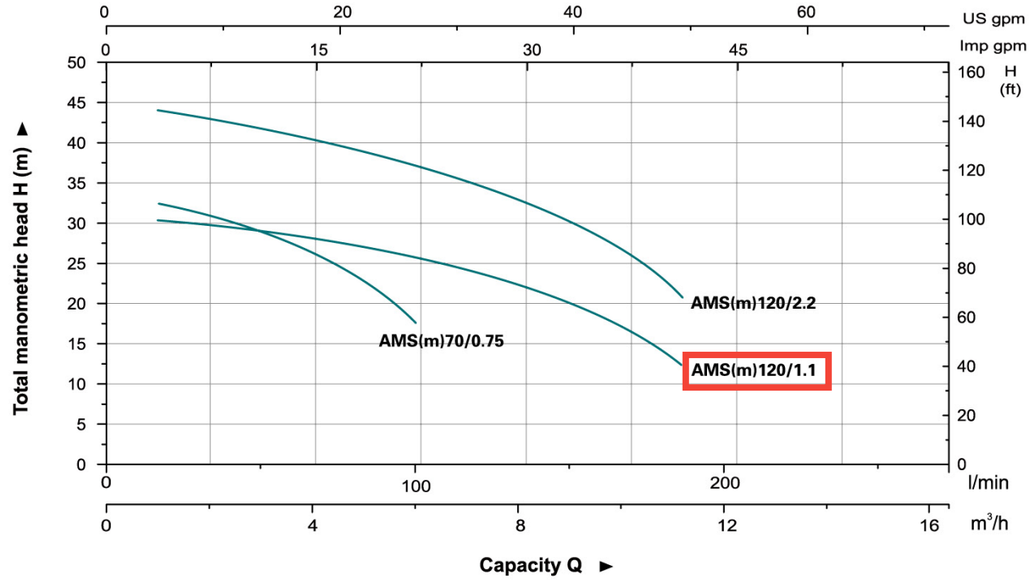

Materials Table

No.	Part	Material
1	Bottom support	Steel
2	Pump body	AISI 304
3	Diffuser	AISI 304
4	Impeller	AISI 304
5	O-ring	NBR
6	Airproof plate	AISI 304
7	Support	ADC12
8	Mechanical seal	Carbon/Ceramic
9	Ball bearing	
10	Rotor	

No.	Part	Material
11	Stator	
12	Rear housing	ADC12
13	Fan	PP
14	Fan cover	PP
15	Terminal box	ABS

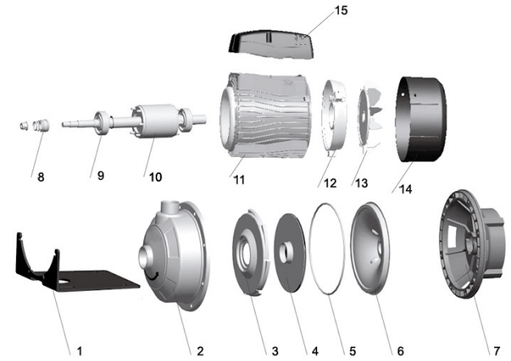

Package Information

Model	GW (Kgs)	L (mm)	W (mm)	H (mm)	Quantity (PCS/20'TEU)
AMS(m)70/0.75	13.9	410	240	270	1072
AMS(m)120/1.1	15.4	410	240	270	1072
AMS(m)120/2.2	20.8	465	240	270	864

